ETP electron multipliers

PRODUCT DATA

Detector for Pulse Counting beyond 10GHz

Preliminary Data Sheet - Specifications may change

- **Pulse-counting beyond 10 GHz**
- **Use with conventional electronics**
- **No mode-switching required**

The DM169 detector is a breakthrough in ion detection incorporating pulse-counting technology. Developed initially for ICPMS applications, the DM169 can be used in any quadrupole application which requires very high counting capability. In addition, the design allows the detector to be used with conventional counting electronics.

The DM169 is comprised of three functionally distinct parts: 1) an ion conversion section, 2) an attenuation control section, and 3) an amplifying section. The unique adjustable attenuation section allows the detection efficiency to be changed dynamically from ~0.01% (for high input flux) to 90% (for low inputs). This capability allows the detector to provide over 10 orders of magnitude of signal detection using pulse-counting only. No mode-switching between analog and pulse-counting is necessary.

Attenuation of the signal is accomplished after ion-to-electron conversion. This helps to limit mass dependent effects due to the detector, while at the same time increasing the upper count-rate limit.

All ETP electron multipliers incorporate totally air-stable "ACTIVE FILM" materials in a discrete-dynode multiplier design to achieve exceptionally sensitive ion detection with long operating life and excellent air stability.

DM169 - Detector for Pulse Counting beyond 10GHz

Preliminary Data Sheet - Specifications may change

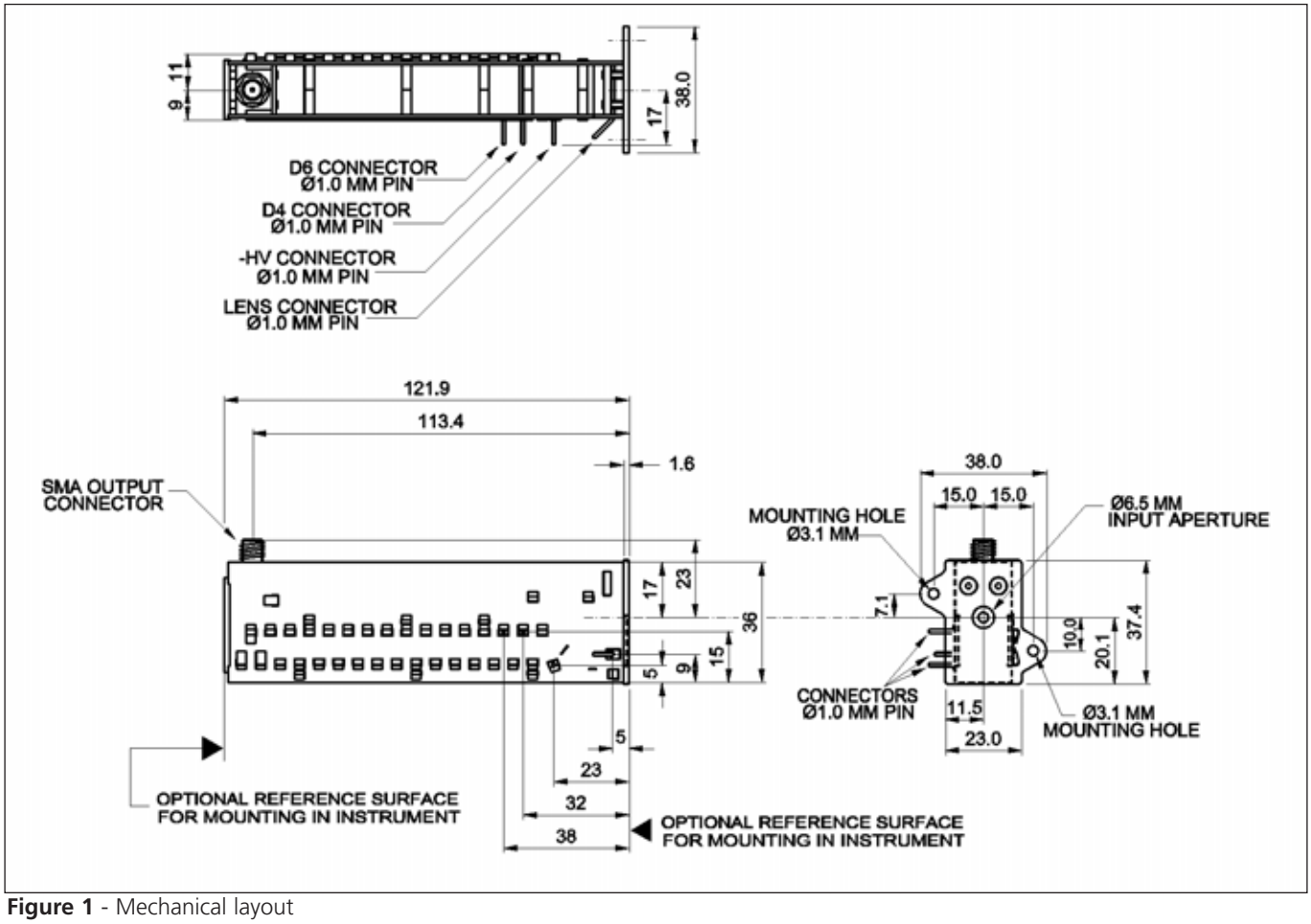

Figure 1 - Mechanical layout

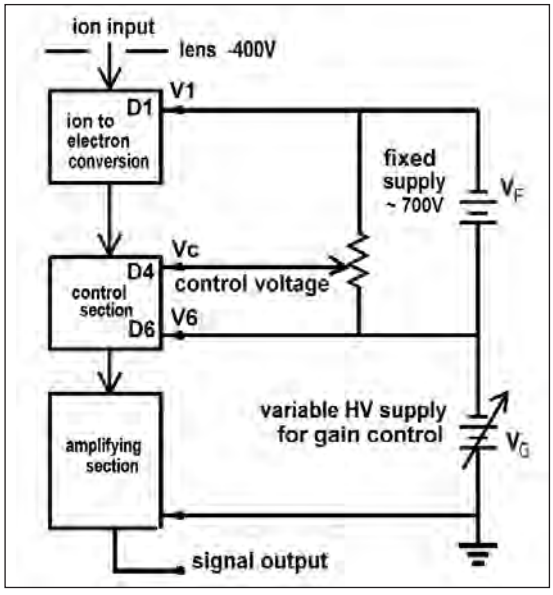

Figure 2 - Electrical setup for operating the DM169

SGE International Pty. Ltd.
Tel: +61 (0) 3 9837 4200
Fax: +61 (0) 3 9874 5672
Email: techsupport@etpsci.com

SGE, Incorporated (USA)
Toll Free: (800) 945 6154
Fax: (512) 836 9159
Email: usa@sge.com

SGE Europe Ltd
Tel: +44 (0) 1908 568844
Fax: +44 (0) 1908 566790
Email: uk@sge.com

ETP electron multipliers
www.etpsci.com

A division of SGE

SGE
www.sge.com

©Copyright 2001. SGE International Pty. Ltd. All rights reserved. PD-0249-A Rev 00 05/02